Versatile Single Chip Telephone with 14 Number Repertory Dialler

SA2531AB

Key Features

- Line/Speech circuit, LD/MF repertory dialler and tone ringer on one 28 pin CMOS chip
- NET 4 compatible
- Soft clipping to avoid harsh distortion
- Line loss compensation selectable by pin option
- Operating range from 13 to 100 mA (down to 5 mA with reduced performance)
- Volume control of receive signal
- Low noise
- Real or complex impedance programmable
- LD/MF switchable dialling
- 31 digits last number redial
- 14 memories, 4 direct/10 indirect or 10 direct
- Sliding cursor protocol with comparison
- Pause key for auto pause (2 sec.) or wait function
- 2 flash keys, 100 ms and 600 ms
- On chip MF filter (CEPT CS 203 compatible)
- Ring frequency discrimination
- 3-tone melody generator General

Description

The SA2531AB is a CMOS integrated circuit that contains all the functions needed to form a high performance electronic telephone.

The device incorporates LD/MF repertory dialling, melody generation, ring frequency discrimination and a high quality line/speech circuit.

A RAM is on chip for a 31 digit last number redial and 14 memories each containing up to 21 digits/data.

The sliding cursor procedure makes the LNR function easy to use under various PABX systems.

The SAS2531AB incorporates a volume control for the earpiece. The volume can be controlled by the VOL key (+ 4 dB) or by the +/– keys (+6 dB/-4 dB in 5 steps).

The versatility of the circuit is provided by on chip programmability and a few external components allowing easy adaptation to different PTT requirements.

Block diagram

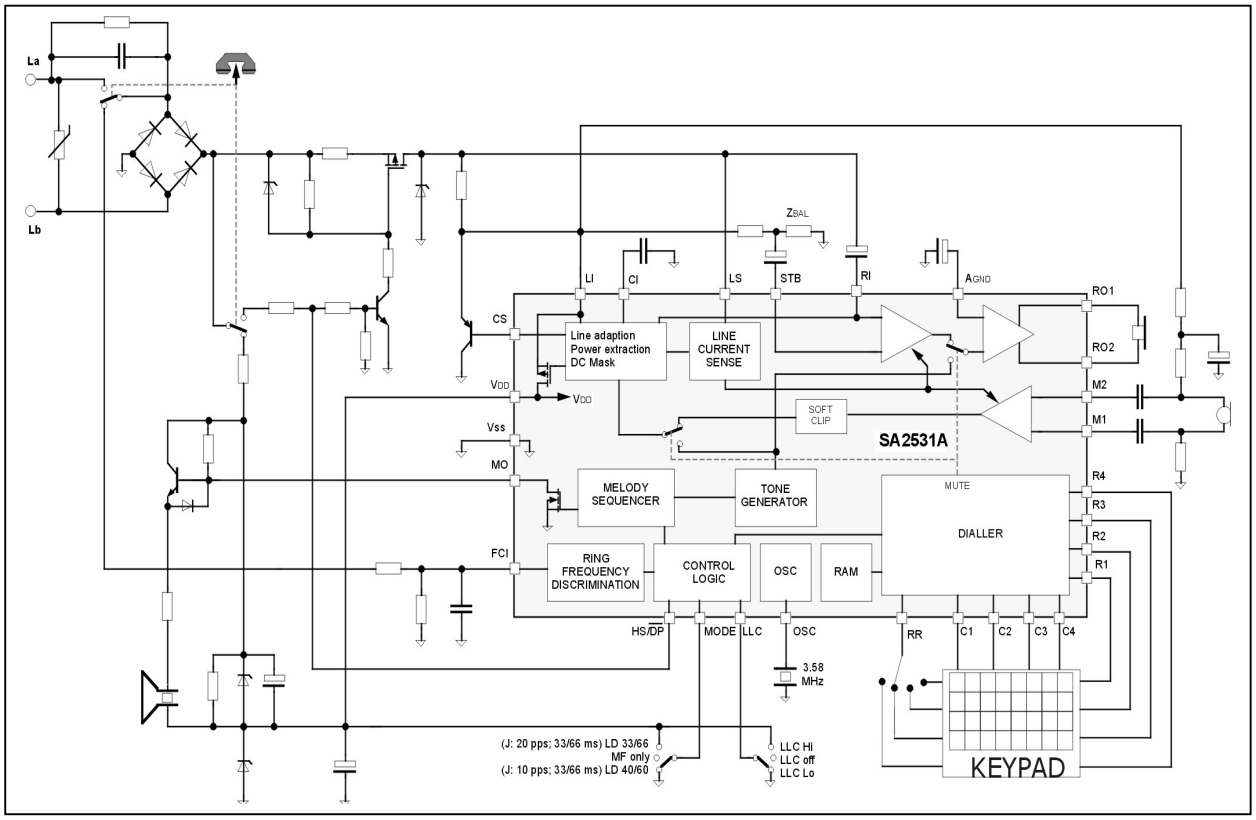

Pin Description

Pin #	Symbol	Name	Function
1	**LS**	**Line Current Sense**	Line current sensing input
2 3	**RO2** **RO1**	**Receiver Outputs**	These are the outputs for driving a dynamic earpiece with an impedance of 150 to 300 Ohms
4	**Vdd**	**Positive Voltage Supply**	
5	**Agnd**	**Analog Ground**	
6	**STB**	**Side Tone Balance**	This is the input for side tone cancellation
7	**CI**	**Complex Impedance**	Input pin for the capacitor in the complex impedance
8	**MO**	**Melody Output**	Pulse Density Modulated output of the melody generator for tone ringer. At high impedance when not active
9	**LLC**	**Line Loss Compensation**	Select input pin for the line loss compensation: LLC = OPEN NONE LLC = LOW 20-50mA LLC = HIGH 45-75mA
10	**HS/DPN**	**Hook Switch Input and Dial Pulse Output**	This is an I/O that is pulled high by the hook switch when off-hook. An open drain pulls it low during break periods of pulse dialing and flash
11	**OSC**	**Oscillator Input**	Oscillator pin for Xtal or ceramic resonator (3.58MHz). Recommended: MURATA CSA 3.58MG312AM
12	**RR**	**Repetition Rate**	Select input pin for repetition rate of melody for the tone ringer
13 14 15 16	**C4** **C3** **C2** **C1**	**Keyboard Columns**	
17 18 19 20	**R4** **R3** **R2** **R1**	**Keyboard Rows**	
21	**FCI**	**Frequency Comparator Input**	This is Schmitt trigger input for ring frequency discrimination. Disabled during off-hook
22	**MODE**	**Signalling Mode Select Input**	MODE=OPEN MF only MODE=LOW LD default mode, 10pps, make/break = 40/60ms MODE=HIGH LD default mode, 10pps, make/break = 33/66ms
23 24	**M1** **M2**	**Microphone Inputs**	Differential inputs for the microphone
25	**CS**	**Current Shunt Control Output**	This N-channel open drain output controls the external high power shunt transistor for the modulation of the line voltage and for shorting the line during make period of pulse dialling
26	**Vss**	**Negative Power Supply**	
27	**LI**	**Line Input**	This input is used for power extraction and line current sensing
28	**RI**	**Receive Input**	This input is used for the receive signal

Package
Available in 28 pin PDIP and SOIC

Pin Configurations

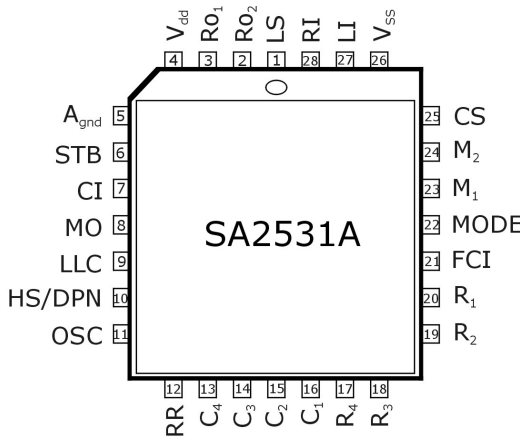

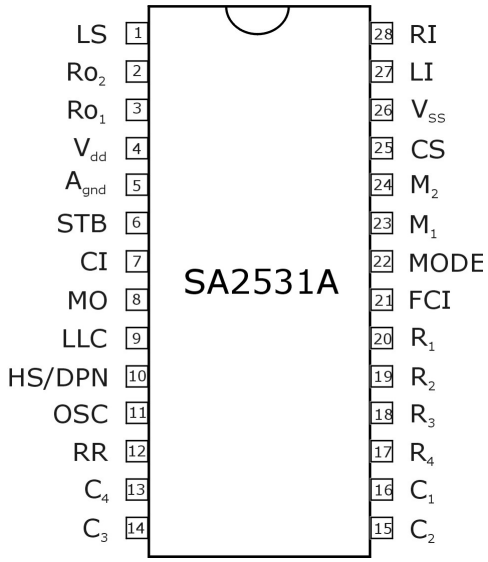

Keyboard Connections 1
10 direct memories (either **VOL** or **+/–** keys)

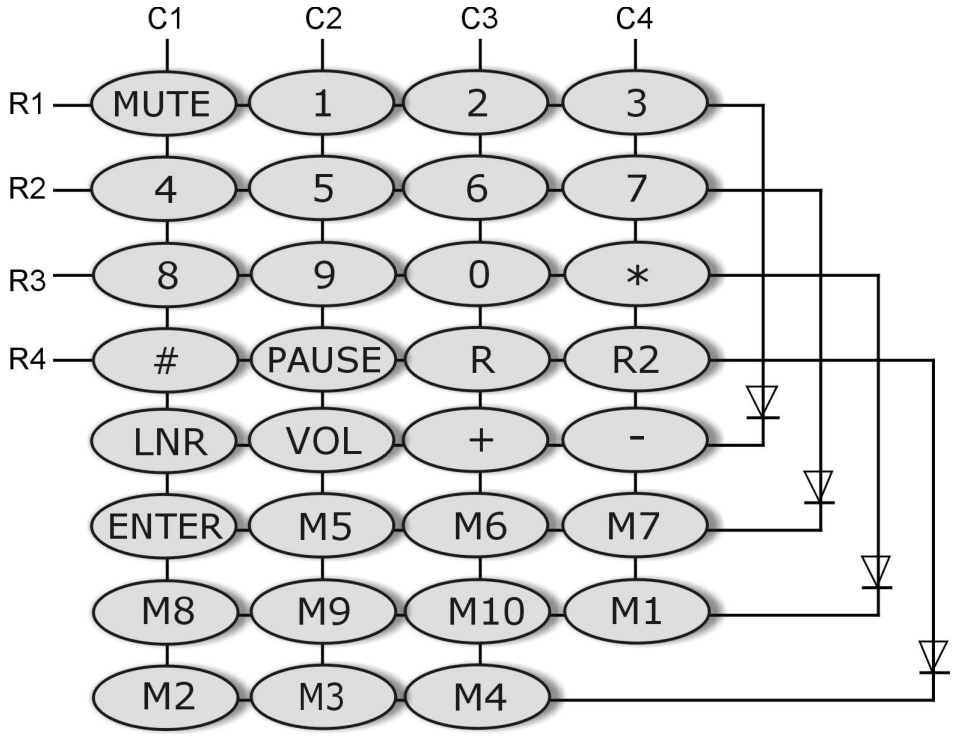

Keyboard Connections 2

4 direct and 10 indirect memories (either **VOL** or **+/–** keys)

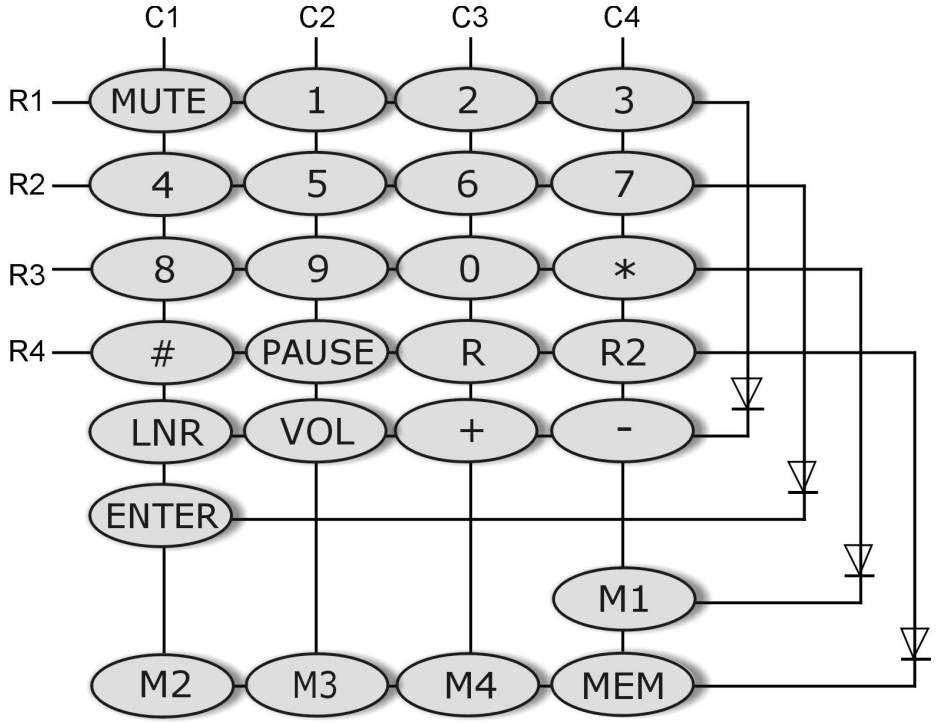

Power On Reset

The on chip power on reset circuit monitors the supply voltage (VDD) during off-hook. When VDD rises above approx. 1.2V, a power on reset occurs which clears the RAM.

DC Conditions

The normal operating range is from 13 mA to 100 mA. Operating range with reduced performance is from 5 mA to 13 mA (parallel operation). In the operating range all functions are operational. At line currents below 13 mA the SA2531 provides an additional slope below 4.5V in order to allow parallel operation (see figure 7). The dc characteristic (excluding diode bridge) is determined by the voltage at LI and the resistor R1 at line currents above 13 mA as follows:

$$VLS = VLI + ILINE \times R1$$

The voltage at LI is 4.5V.

During pulse dialling the speech circuit and other part of the device not operating is in a power down mode to save current. The CS pin is pulled to VSS in order to turn the external shunt transistor on to keep a low voltage drop at the LS pin during make periods.

AC Impedance

The ac impedance of the circuit is set by mask options and an external capacitor. The impedance can be real or complex. Return loss and side tone cancellation can be determined independent of each other (see figure 1).

Speech Circuit

The speech circuit consists of a transmit and a receive path with dual soft clipping, mute, line loss compensation and sidetone cancellation.

Transmit

The gain of the transmit path is 35 dB for 600 Ohm and 37 dB for 1000 Ohm from M1/M2 to LS (see test circuit figure 2). The microphone input is differential with an input impedance of 25 kOhm. The soft clip circuit limits the output voltage at LI to $2V_{PEAK}$ (see figure 5 and 6). The attack time is 30 ms/6 dB and the decay time is 20ms/6dB

Receive

The gain of the receive path is 2 dB for 600 Ohm and 0 dB for 1000 Ohm (see test circuit figure 2) with differential outputs, RO1/RO2. The receive input is the differential signal of RI and STB. When mute is active during dialling the gain is reduced by > 60 dB. During DTMF dialling a MF comfort tone is applied to the receiver. The comfort tone is the DTMF signal with a level that is approximately -30 dB relative to the line signal.
The receive gain can be changed by pressing the volume keys. The **VOL** key gives a +4 dB boost and has a toggle function, i.e. repressing the key resets the gain to default. Alternatively the **+/–** keys can be used. The **+** key increases the gain by 6 dB in 3 steps and the **–** key decreases the gain by 4 dB in 2 steps. The gain is reset by next off-hook.

Sidetone

A good sidetone cancellation is achieved by using the following equation:

$$Z_{BAL}/Z_{LINE}=R5/R1$$

The sidetone cancellation signal is applied to the STB input.

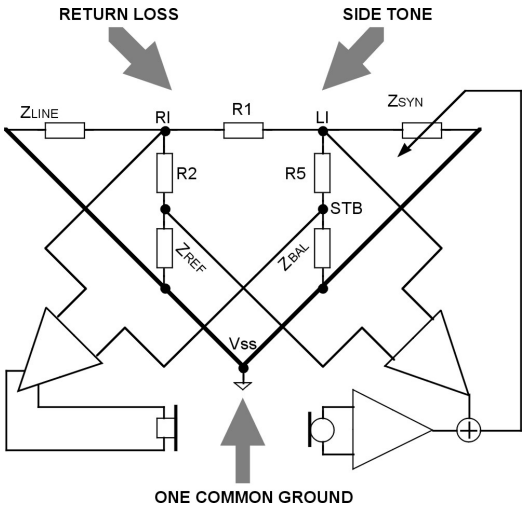

Figure 1
Dual balance bridge (return loss and sidetone) with one common ground

Side Tone is controlled along with Return Loss by a Double Balance Bridge as shown in figure 1.

Line Loss Compensation

The line loss compensation is a pin option. When it is activated, the transmit and receive gains are decreased by 6 dB at line currents from 20 to 50 mA when LLC = low and 45 to 75 mA when LLC = high (@ R1 = 30 Ohm).
The line loss compensation is disabled when LLC = open (see figure 3 and 4).

Dialling Functions

Valid Keys

The key scanning is enabled when HS/DPN is pulled high and VDD is above VREF. A valid key is detected from the keyboard by connecting the appropriate row to the column (RON 1 kOhm). This can be done using an n x m keyboard matrix with single contacts. Four diodes are used to extend the number of rows (see keyboard arrangement 1 and 2). It is also possible to connect a µ-controller to the rows and columns.

Mute Key

The **MUTE** key is enabled in speech mode only. Depressing the **MUTE** key mutes the microphone amplifier. Repressing the **MUTE** key deactivates the mute (toggle function). Any key entry overwrites a mute activated by the **MUTE** key and mute will be deactivated. When privacy mute is activated, a reminder tone is applied to the earpiece.

Dial Mode Selection

The default mode (LD or MF) can be selected by the mode pin. When default LD mode is selected, a temporary change to MF can be invoked by pressing the ***** key (a metal mask option is available whereby the MF tone generated is generated on the first ***** key).
The circuit will revert to LD by pressing the **R** (or **R2**) key or by next onhook.
When MF mode is selected by the mode pin, the circuit can not be changed temporary to LD but will remain in MF.

Last Number Redial

LNR is a facility that allows re-signalling of the last manually dialled number without keying in all the digits again. The LNR is repeatable.
The current contents of the RAM are overwritten by new entries.
A manually entered number is automatically stored in the LNR RAM. The capacity of the RAM is 31 digits. If a number greater than 31 digits is entered, the LNR facility will be inhibited (until new entries < 32 digits) and further entries will be buffered in FIFO. Pauses can be inserted by pressing the **PAUSE** key. Post dialled digits, i.e. digits manually entered after LNR has been invoked, are not stored in RAM but buffered in FIFO.

Recall Function

A recall (**R** key or **R2** key) activation will invoke a flash (timed loop break). A metal mask option is available that inhibits a flash in LD mode.
If recall is the first entry in a digit string, it will be stored in LNR RAM when digit(s) are entered after the recall. If the recall key is depressed after a digit string has been entered or dialled out, the recall will not be stored but buffered in the FIFO together with subsequently entered digit. If pressing the recall key is not followed by digit entries, the LNR RAM remains intact. A post-flash pause of 274ms will automatically be executed. A metal mask option will allow a post-flash pause of 3 seconds.

Memory Keys

The keys **M1** to **M10** are direct memory access keys and the **MEM** key is used for abbreviated dialling.
In the on chip RAM,14 numbers can be stored. Each number can contain up to 21 digits (including pauses).
During programming multiple pauses can be inserted by pressing the **PAUSE** or the **LNR** key. Each pause is 2 seconds (a metal mask option is available with both 6sec and 3 sec pauses) when inserted within the first 5 digits otherwise a wait function that will halt dialling until the **PAUSE** or the **LNR** key is depressed.
Memory dialling is cascadable. However, the content of one memory must be dialled out before a new can be invoked.

Sliding Cursor Procedure

To accommodate easy and uncomplicated redialling (LNR) behind a PABX, a sliding cursor protocol is implemented. If new entries match the previous RAM contents, pressing the **LNR** key will dial out the remaining digits. If there is an error in matching, the LNR will be inhibited until next on-hook, and the RAM will contain the new number.

Tone Generator

The tone generator incorporates the DTMF tones and 3 basic frequencies for the tone ringer.

DTMF Tones

The DTMF generator provides 7 frequencies, namely:

Low group

Digit 1-2-3	697 Hz
Digit 4-5-6	770 Hz
Digit 7-8-9	852 Hz
Digit * -0-#	941 Hz

High group

Digit 1-4-7-*	1209 Hz
Digit 2-5-8-0	1336 Hz
Digit 3-6-9-#	1477 Hz

The MF output level is -6/-8 dBm or -9/-11 dBm depending on version. The pre-emphasis is 2.6 dB. The MF tones are according to CEPT recommendations.

Tone Ringer (Melody)

The three basic frequencies of the melodies are:

F1=800Hz, F2=1067Hz, and F3=1333 Hz (± 5%).

The repetition rate can be set by pin options as follows:

PIN	RR Repetition rate
R1	1 time (50 ms pause)
R2	4 times
R3	7 times
R4	10 times
OPEN	Disabled

Repetition rate means that a sequence of 6 frequencies is repeated 1, 4, 7 or 10 times within 1 second.

The sequence of the frequencies is controlled by the sequence register as follows:

Sequence F1 F2 F3 F1 F2 F3 …

Ring Frequency Discrimination

The ring frequency discriminator assures that only signals with a frequency between 13Hz and 70 Hz are regarded as valid ring signals.
When a valid ring signal is present for 73 ms continuously, the melody generator is activated and remains active as long as the ring signal is present.
Once the melody generator has been started, the ring signal is continuously monitored and the melody generator is instantly turned on or off according to the momentary presence of a valid or invalid ring signal respectively (until next POR or off-hook).

Typical Application

Only the components necessary for presenting the complete functions of the SA2531A are shown.

The components may change to comply with various national PTT regulators and to interface to different transducers.

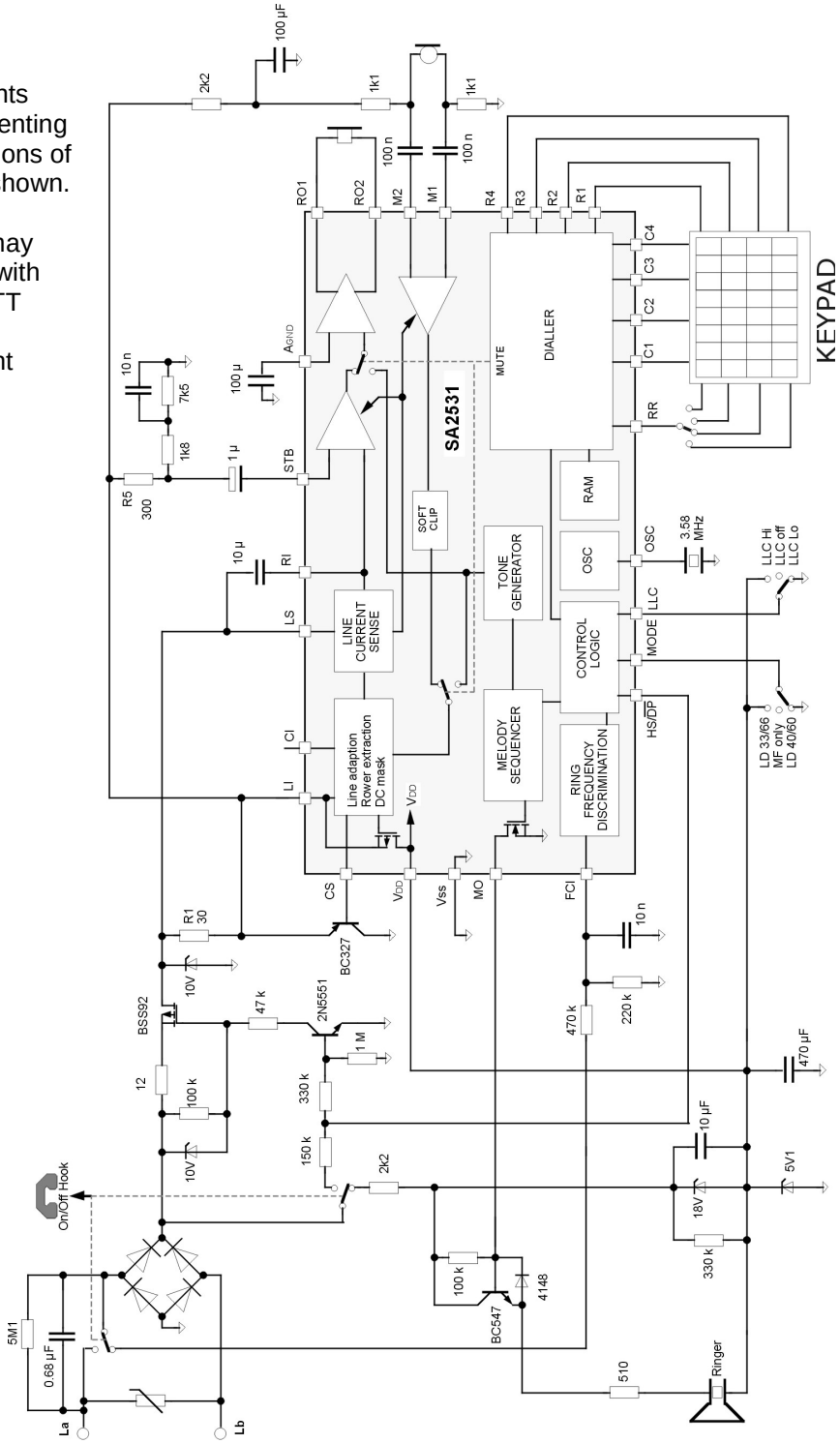

Operating Procedures

Procedure Principles

The procedures for utilizing the features of the SA2531 are optimized out of consideration for the human factor in order to:

- meet the user's expectations

- be easy to learn and relearn

- not invoke any automatic functions which the user doesn't expect

- protect the user from committing critical errors, e.g. dialling wrong numbers, deleting stored numbers, etc.

- be consistent, simple and usable.

The following pages describe the operating procedures for the provided features. Pressing an invalid key or key combination during programming will cause the device to abort the program state. Pressing any key combination or sequence which is not described or defined may cause the device to enter a state or mode that does not comply with the expectation of the user. In such cases, any undesired state can be terminated at any time by going on-hook / off-hook which will generate a functional reset.

Symbols

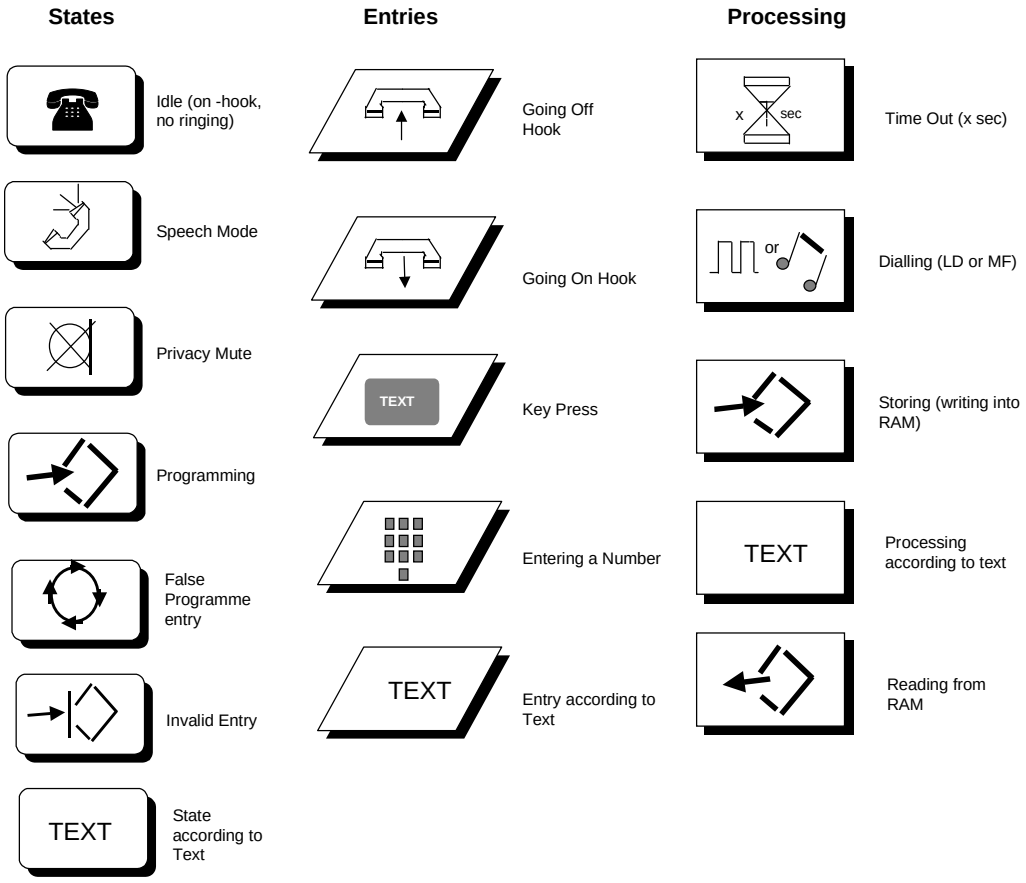

PRIVACY - MUTE FUNCTION

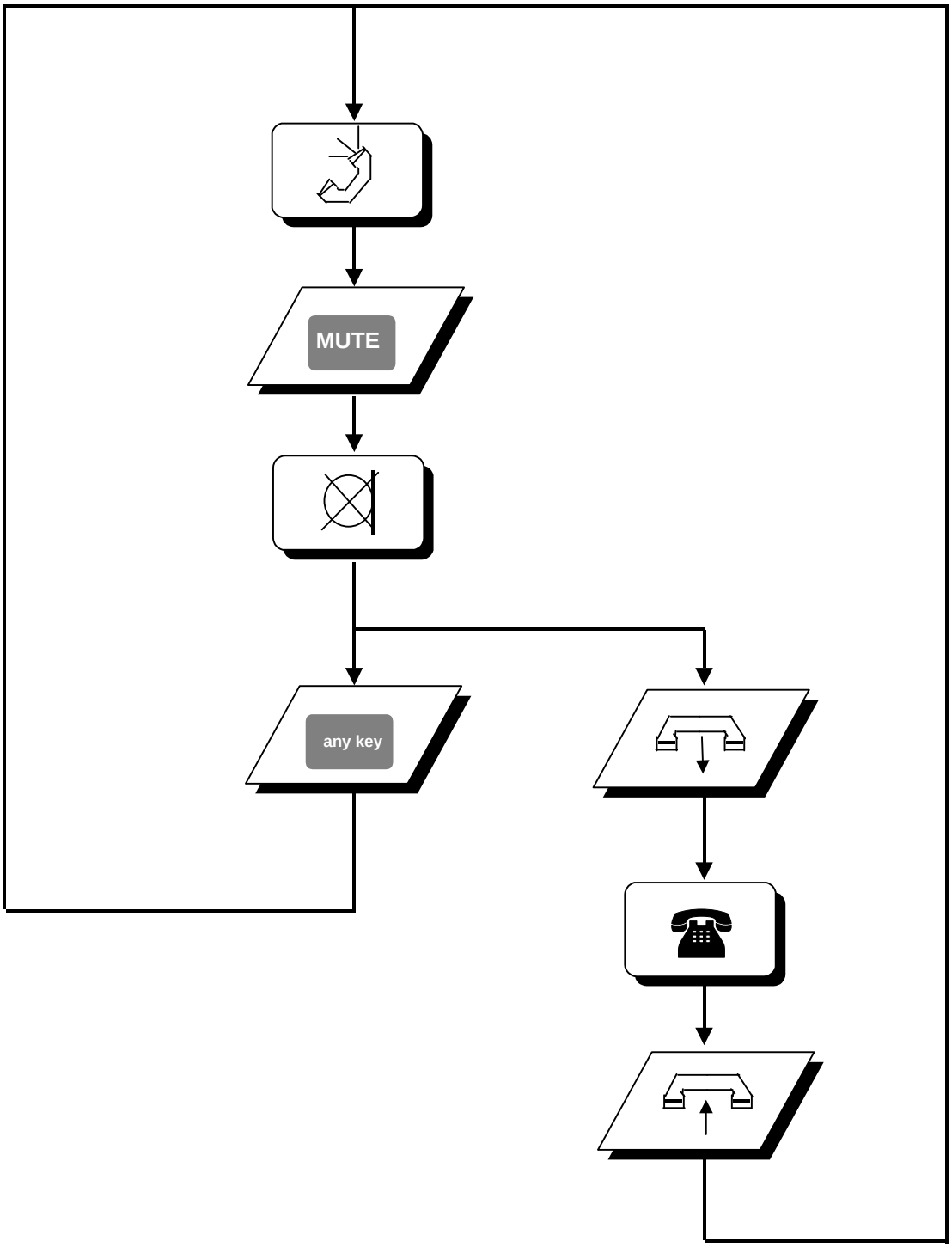

TEMPORARY MF FUNCTION

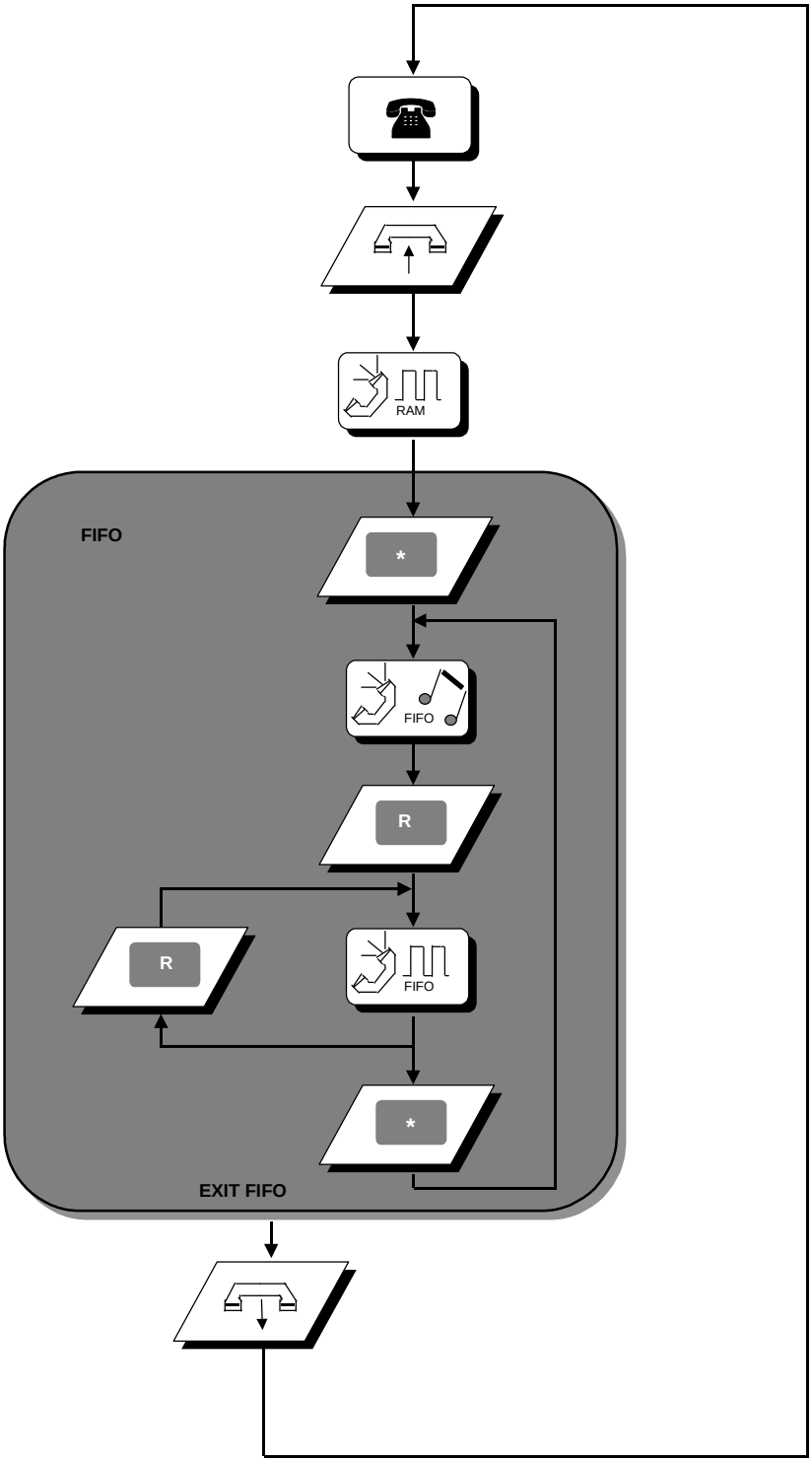

LAST NUMBER REDIAL (LNR)

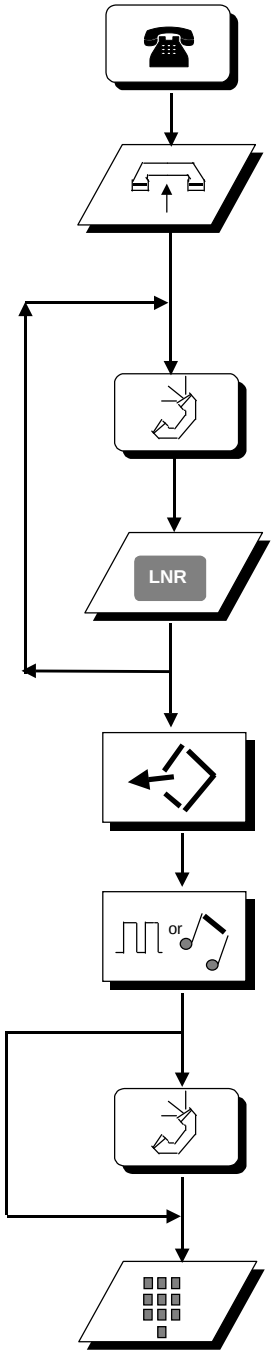

STORING NUMBERS FUNCTION

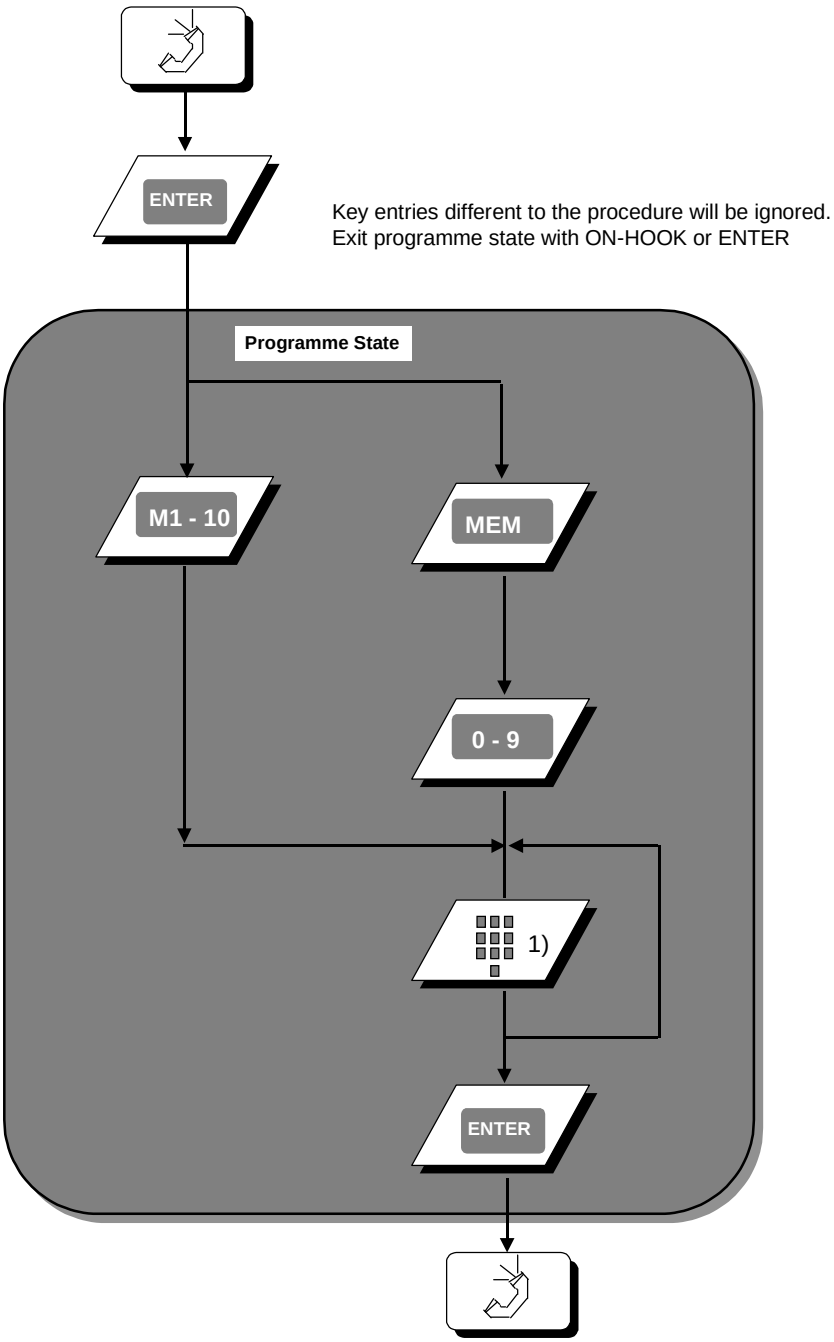

1) Entries (0-9, *, #, PAUSE, R1, R2) will be stored into the selected memory

AUTOMATIC DIALING FUNCTION

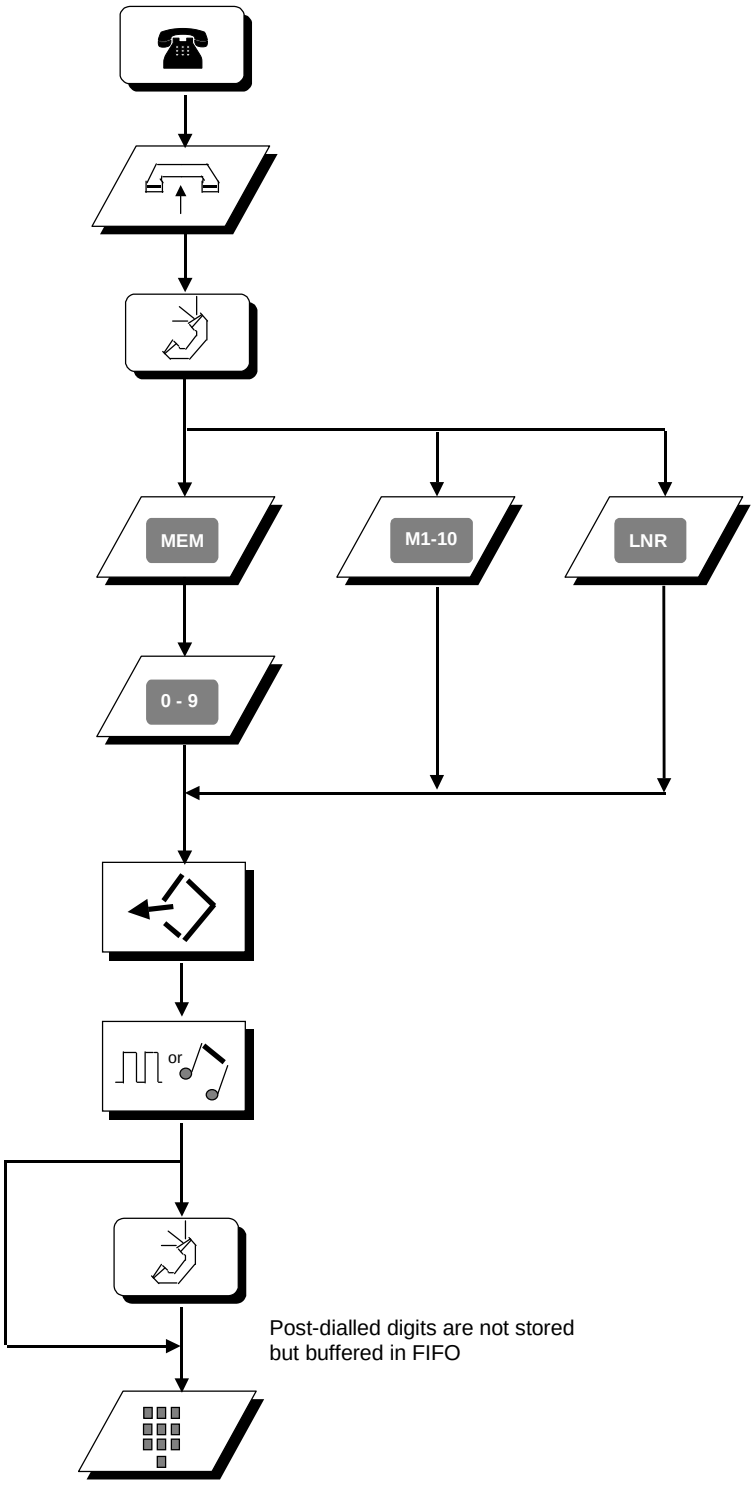

TIMING DIAGRAMS

LD Dialing

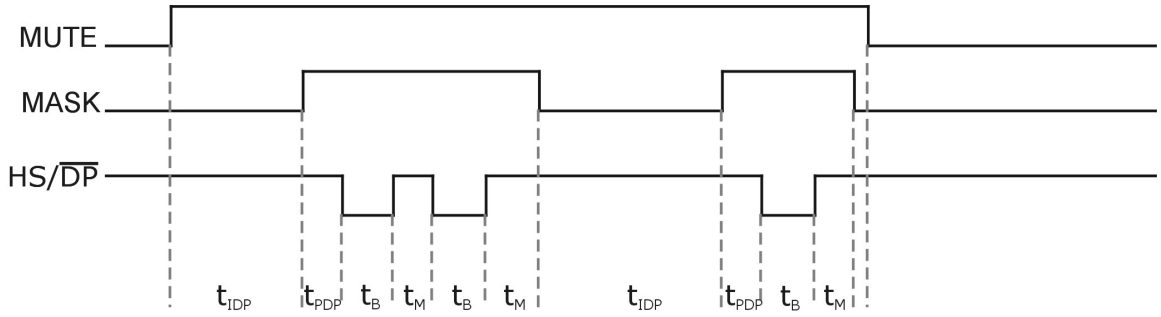

LD Dialling With Access Pause

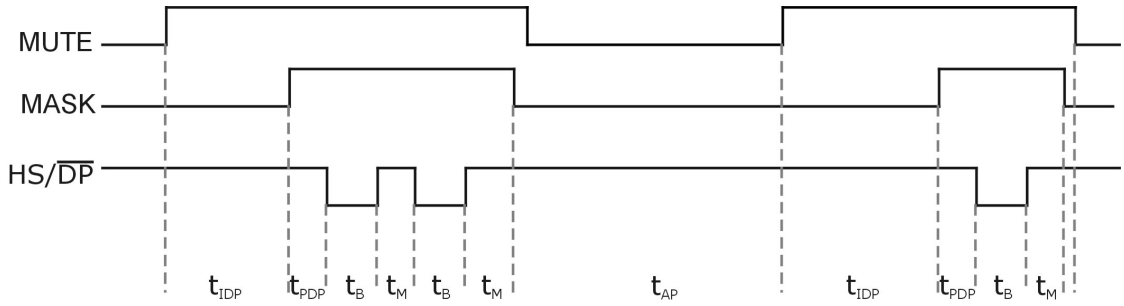

MF Dialling

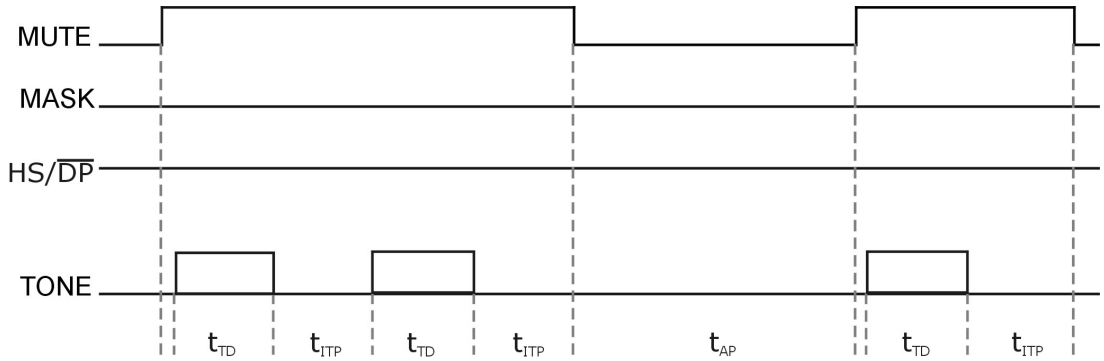

Flash

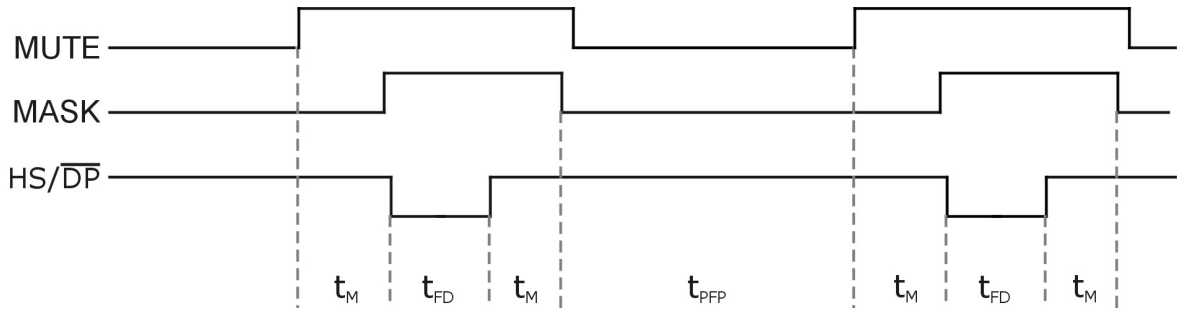

Electrical Characteristics

Absolute Maximum Ratings

Positive Supply Voltage..... -0.3V ≤ VDD ≤ 7V
Input Current..... ± 25 mA
Input Voltage (LS) ..... -0.3V ≤ VIN ≤ 10V
Input Voltage (LI, CS) ..... -0.3V ≤ VIN ≤ 8V
Input Voltage (STB, RI) ..... -2V ≤ VIN ≤ VDD+0.3V
Input Voltage (MO) ..... -0.3V ≤ VIN ≤ 35V
Digital Input Voltage.....-0.3V ≤ VIN ≤ VDD+0.3V
Electrostatic Discharge ..... +/- 800V
Storage Temperature ..... -65°C to +125°C

Recommended Operating Conditions

Supply Voltage *(Speech Mode)..... 4V ≤ VDD ≤ 5V
Oscillator Frequency (Resonator: Murata CSA 3.58M G312AM) ..... 3.58 MHz
Operating Temperature ..... - 25°C to +70°C
* This voltage is generated internally

DC Characteristics (ILINE = 15 mA; unless otherwise specified)

Symbol	Parameter	Conditions	Min	Typ	Max	Unit
I_{DD}	Operating Current	Speech mode		3	5	mA
		MF dialling		4		mA
		LD dialling, VDD = 2.5V		200		mA
		Ring mode, VDD = 2.5V		300		mA
I_{DDO}	Retention Current	Idle mode, VDD = 2V TAMB = 25°C		0.05		uA
V_{LI}	Line Voltage (default)	13mA ≤ I_{LINE} ≤ 100mA		4.5		V
I_{OL}	Output current sink CS,HS/DP,MO	V_{OL}=0.4V		1.5		mA

AC Characteristics (ILINE = 15 mA; f=800Hz unless otherwise specified)

Symbol	Parameter	Conditions	Min	Typ	Max	Unit
T_X	**TRANSMIT**	Test circuit fig. 2				
A_{TX}	Gain (M1/M2)	Z_{RL}=600Ω	34	35	36	dB
		Z_{RL}=1000Ω (Metal Mask Option)		36.5		dB
$\Delta A_{TX/F}$	Variation with freq.	f=500Hz to 3400Hz		±0.8		dB
THD	Distortion	$V_{LI} \leq 0.5V_{RMS}$			2	%
V_{AGC}	Soft clip level	V_{LI} =		2		V_{PEAK}
A_{SCO}	Soft clip overdrive			20		dB
t_{ATTACK}	Attack time			30		µs/6dB
t_{DECAY}	Decay time			20		µs/6dB
Z_{IN}	Input impedance			20		kΩ
A_{MUTE}	Mute attenuation	Mute activated	60			dB
V_{NO}	Noise output voltage				-72	dBmp
V_{INMAX}	Input voltage range (M1/M2)	Differential		±1		V_{PEAK}
		Single ended		±0.5		V_{PEAK}
BJT	**OUTPUT DRIVER**					
V_{INMAX}	Input voltage range LI			±2		V_{PEAK}
V_{TX}	Dynamic range			±2		V_{PEAK}
R_L	Return loss	Z_{RL}=600Ω and 1000Ω	18			dB
$\Delta Z_{AC/TEMP}$	Variation with temp.			0.5		Ω/^{0}C
R_X	**RECEIVE**	Test circuit fig. 2				dB
A_{TX}	Gain (RO1/RO2)	Z_{RL}=600Ω	1	2	3	dB
		Z_{RL}=1000Ω (Metal mask option)		0		
$\Delta A_{TX/F}$	Variation with freq.	f=500Hz to 3400Hz		±0.8		dB
THD	Distortion	$V_{LI} \leq 0.5V_{RMS}$			2	%
V_{AGC}	Soft clip level	V_{RI} =		1		V_{PEAK}
A_{SCO}	Soft clip overdrive	V_{RI} > 0.8V		10		dB
t_{ATTACK}	Attack time			30		µs/6dB
t_{DECAY}	Decay time			20		µs/6dB
Z_{IN}	Input impedance			20		kΩ
A_{MUTE}	Mute attenuation	Mute activated	60			dB
V_{NO}	Noise output voltage				-72	dBmp
V_{FC}	Unwanted frequency component	50Hz 20KHz			-60	dBm
Z_{IN}	Input impedance RI			8		kΩ
V_{INMAX}	Input voltage range RI			±2		V_{PEAK}

AC Characteristics (cont) (ILINE = 15 mA; f=800Hz unless otherwise specified)

Symbol	Parameter	Conditions	Min	Typ	Max	Unit
ST	SIDE TONE	Test circuit fig. 2 $V_{RI} \leq 0.5V_{RMS}$				
A_{ST}	Side tone cancellation		26			dB
V_{INST}	Input voltage range STB			±2		V_{PEAK}
Z_{IN}	Input impedance STB			80		kΩ
t_D	**KEYBOARD** Key debounced time			15		ms
T_{HS-L}	**HS INPUT** Low to high debounce	Going OFF-HOOK		15		ms
T_{HS_H}	High to low debounce	Line brakes/ON-HOOK		240		ms
ΔF	**DIALLING** Frequency deviation	Note 5			1.2	%
V_{MF}	MF tone low group	Metal Mask Option	-12.5	-11	-9.5	dB
		Standard Option	-9.5	-8	-6.5	dB
ΔV_{L-H}	Preemphasis Low to High	Standard Option	1.8	2.6	3.0	dB
ΔV_{H-L}	Preemphasis High to Low	Metal Mask Option	1.8	2.6	3.2	dB
V_{MF}	MF tone low group	Metal Mask Option	-12.5	-11	-9.5	dB
		Standard Option	-9.5	-8	-6.5	dB
t_{TD}	Tone duration	Note1	80	82.3	85	ms
t_{ITP}	Inter tone pause	Standard Option	80	82.3	85	ms
		Metal Mask Option	160	165	170	ms
t_{TR}	Tone rise time	Note2			5	ms
t_{TF}	Tone fall time				5	ms
t_{DR}	LD dial rate	±5%		10		pps
		±5%, Metal Mask Option		20		pps
$T_{M/B}$	Make/Brake period	±5% -not available if 20pps selected		40.8/ 61.2		ms
		±5%		33/66		ms
t_{PDP}	Pre digit pause	Note 7	800	35	880	Ms
t_{IDP}	Inter digit pause			840		ms
t_{MO}	Mute overhang			t_M		

AC Characteristics (cont) (ILINE = 15 mA; f=800Hz unless otherwise specified)

Symbol	Parameter	Conditions	Min	Typ	Max	Unit
t_{TR}	Tone rise time	Note2			5	ms
t_{TF}	Tone fall time				5	ms
T_{FD}	Flash duration 1	Standard Option	100		102	ms
	Flash duration 2	Metal Mask Option	270		300	ms
	Flash duration 3	Standard Option	600		650	ms
T_{PFP}	Post flash pause	Metal Mask Option	2.9	3.0	3.1	sec
		Standard Option		274		ms
T_{AP}	Access pause	Metal Mask Option	2.9	3.0	3.1	sec
		Metal Mask Option	5.8	6	6.2	sec
		Standard Option	2.0	2.05	2.12	sec
	TONE RINGER					
V_{MO}	Melody output			PDM		
t_{MD}	Melody delay				10	ms
F1	Frequency 1		770	800	830	Hz
F2	Frequency 2		1025	1067	1110	Hz
F3	Frequency 3		1280	1333	1350	Hz
T_{DT}	Detection time	Initial	70		80	ms
T_{TO}	Detection time-out			Note4		
f_{min}	Min detection Frequency	Metal Mask Option	19	20	21	Hz
f_{min}	Min detection frequency	Standard Option	12	13	14	Hz
f_{max}	Max detection frequency	Metal Mask Option	58	59	60	Hz
f_{max}	Max detection frequency	Standard Option	68	70	75	Hz
	REMINDER TONE					
V_{RT}	Level (RO1/RO2)	Relative to LS		-30		dBr
t_{RTD}	Duration			82.3		ms
t_{RTI}	Interval	Metal Mask Option		3		sec
t_{RTI}	Interval	Standard Option		274		ms
	COMFORT TONE					
V_{CT}	Level (RO1/RO2)	Relative to LS		30		dBr

Note 1: The values are valid during automatic dialling and are minimum values during manual dialling, i.e. the tones will continue as long as the key is depressed.

Note 2: The rise time is the time from 10% of final value till the tone amplitude has reached 90 % of its final value.

Note 3: Relative to high group.

Note 4: The FCI circuit is reset by POR and HS/DP pulled high (off-hook). After a reset the FCI circuit is in a standby state. A positive edge on FCI will start a 73 ms timer and the frequency discrimination is initiated. Whenever a period of the ring signal is missing, the timer is reset. When a valid ring signal is present for 73 ms, the melody generator is started and is directly controlled by the ring signal. This condition will remain until a new reset. A metal mask option is available which removes this 73ms timer.

Note 5: This does not include the frequency deviation of the ceramic resonator.

Note 6: -37 dBm at 4.3 kHz and decreasing 12 dB/octave till 28 kHz.

Note 7: When the dial rate 20 pps metal mask option is selected, all LD timings will be twice the speed of 10 pps.

Metal Mask Options.

The following Metal Mask options are available but will only be invoked on the acceptance of a volume production order.

Description	Standard Option	Alternative Metal Mask Options
Impedance	600 Ohm	1000 Ohm
DTMF Levels	-6/-8 dBm	-9/-11 dBm (or other)
Frequency Comparator Input	13 - 70 Hz	20 - 60 Hz
Inter Tone Pause	82 ms	165 ms
Recall R2	600ms	274ms
Flash in LD Mode	yes	No
Flash Pause	274ms	2sec, 3 sec
Access Pause	2 sec	3 sec, 6 sec, 274ms
STAR Key press in LD mode	Change to MF Mode	Change to MF Mode and dial STAR
Ringer Frequencies	800, 1067, 1333 Hz	1065, 1420, 1734Hz
Pulse Dial Frequency PPS	10pps	20pps
Flash enable	Flash enabled in both LD and MF	Flash enabled in MF only
Earpiece Mask during LD break	Not enabled	Enabled
Ring Detection Timer	Enabled 73ms	Not enabled
LNR Operation	Re-dials only LD digits in mixed LNR number	Re-dials entire mixed LNR number
Inter-Digit-Pause	840ms	800ms
Receiver Volume Reset	RX Volume reset after Hookswitch	RX Volume reset after POR

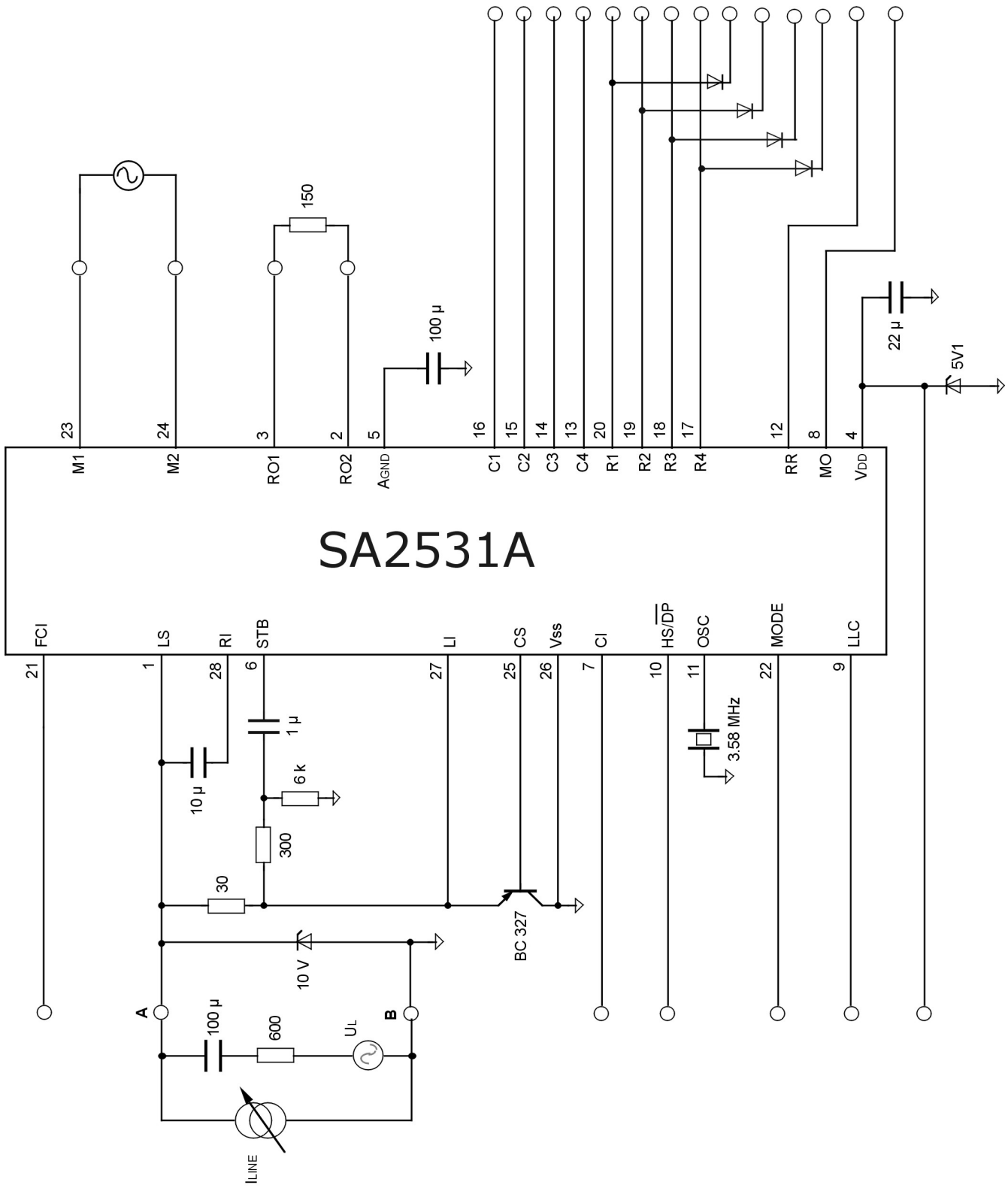

Figure 2
Test circuit

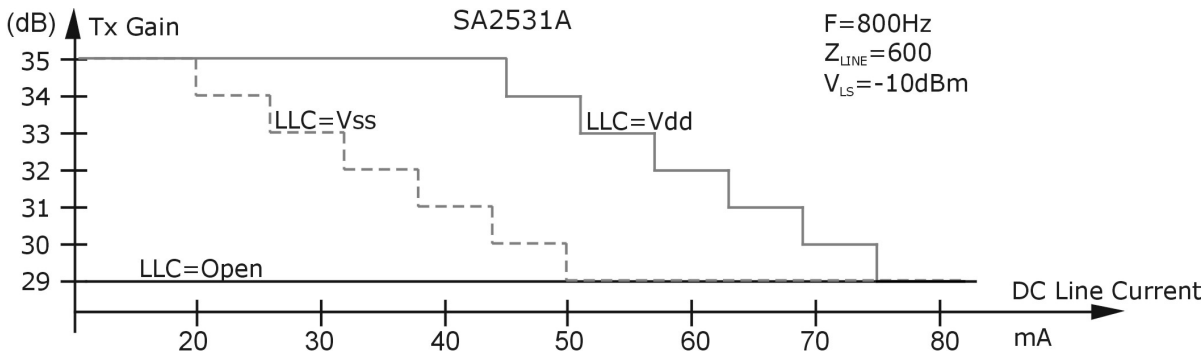

Figure 3
Line Loss Compensation Characteristic Tx Gain

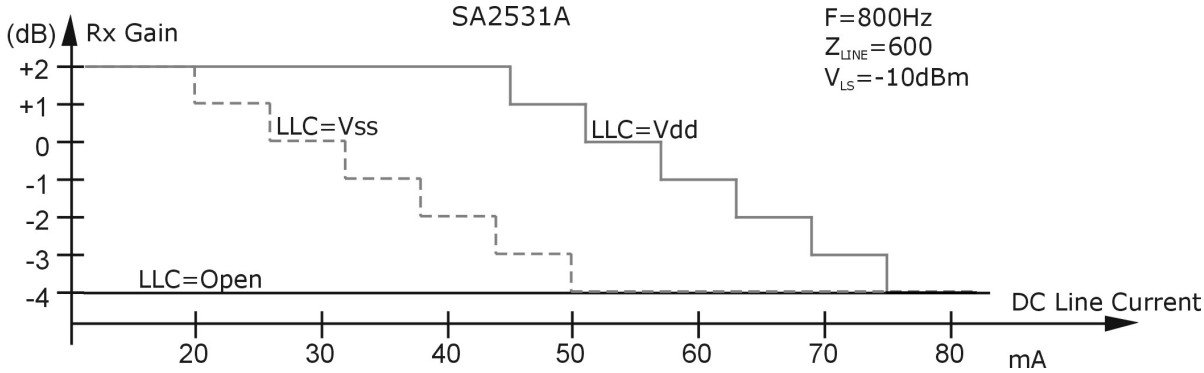

Figure 4
Line Loss Compensation Characteristic Rx Gain

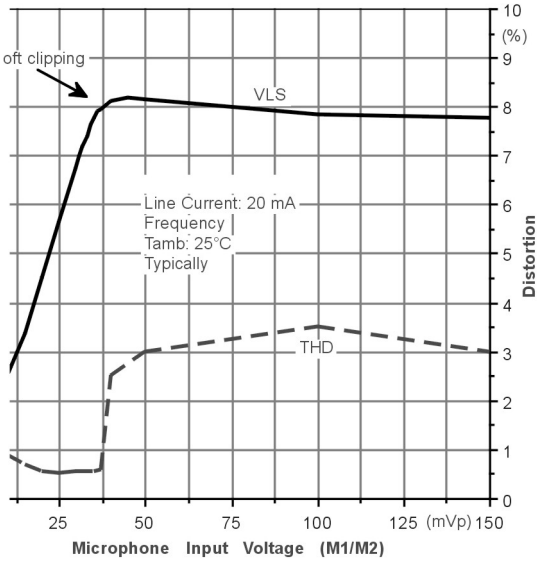

Figure 5
Transmit Soft Clipping and Distortion

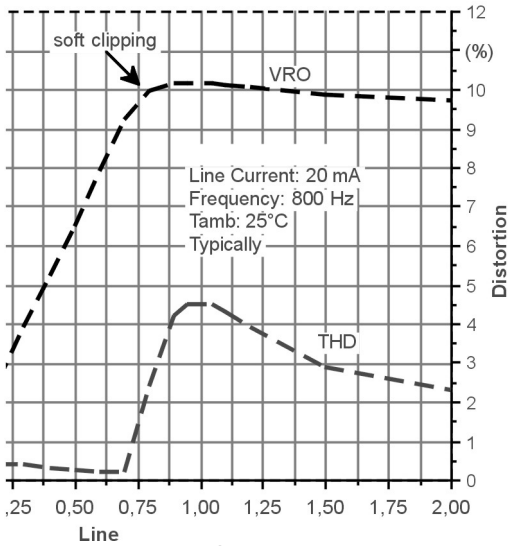

Figure 6
Receive Soft Clipping and Distortion

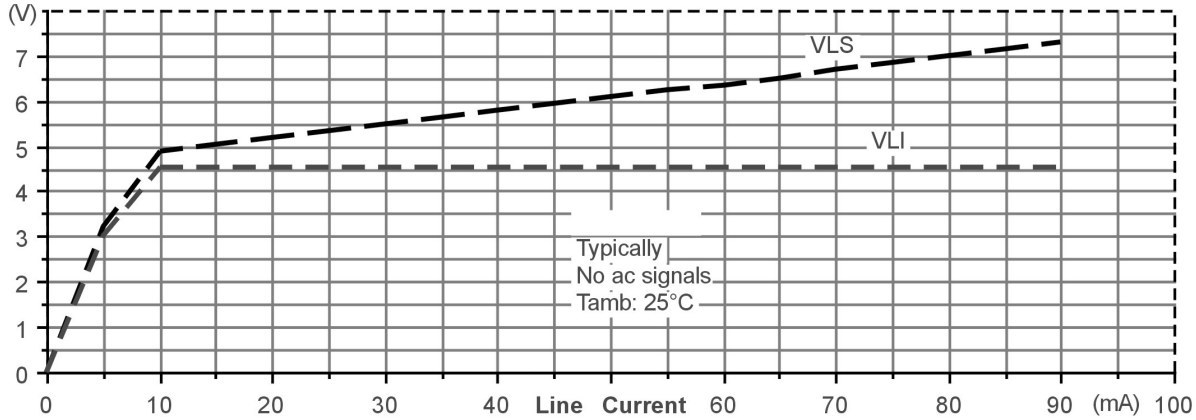

Figure 7
DC MASK

DISCLAIMER:

Any sales or technical questions may be posted to our e-mail address below:
info@sames.co.za

For the latest updates on datasheets, please visit our web site:
http://www.sames.co.za.

SOUTH AFRICAN MICRO-ELECTRONIC SYSTEMS (PTY) LTD

Tel: (012) 333-6021
Tel: Int +27 12 333-6021
Fax: (012) 333-8071
Fax: Int +27 12 333-8071

P O BOX 15888
33 ELAND STREET
LYNN EAST 0039
REPUBLIC OF SOUTH AFRICA

33 ELAND STREET
KOEDOESPOORT INDUSTRIAL AREA
PRETORIA
REPUBLIC OF SOUTH AFRICA